BAE SYSTEMS PROPRIETARY INFORMATION:
THE PROPRIETARY RIGHTS OF BAE SYSTEMS TACTICAL VEHICLE SYSTEMS LP, ARE INCLUDED IN THE INFORMATION DISCLOSED HEREIN. RECIPIENT, BY ACCEPTING THIS DOCUMENT, AGREES THAT NEITHER THIS DOCUMENT NOR THE INFORMATION DISCLOSED HEREIN NOR ANY PART THEREOF SHALL BE REPRODUCED OR TRANSFERRED TO OTHER DOCUMENTS OR USED OR DISCLOSED TO OTHERS FOR ANY PURPOSE EXCEPT AS SPECIFICALLY AUTHORIZED IN WRITING BY BAE SYSTEMS TACTICAL VEHICLE SYSTEMS LP. ANY UNAUTHORIZED DISCLOSURE OF THE INFORMATION CONTAINED IN THIS DOCUMENT MAY BE A VIOLATION OF THE TRADE SECRETS ACT. THIS INFORMATION IS EXEMPT FROM DISCLOSURE UNDER EXEMPTIONS 3 AND 4 OF THE FREEDOM OF INFORMATION ACT.
BAE SYSTEMS TWV JLTV FIREWALL POLICY APPLIES.
CONTACT INFORMATION: BAE SYSTEMS TACTICAL VEHICLE SYSTEMS LP, 2000 I-10 WEST, SEALY, TEXAS 77474

DRAWING NO. 6457819 SHT 1 REVISION X0

THIS DRAWING HAS BEEN GENERATED AND IS MAINTAINED BY A CAD SYSTEM AND ANY CHANGE MUST BE AUTHORIZED AS DIRECTED BY THE DESIGN ACTIVITY

REVISIONS

ZONE	REV	DESCRIPTION	DATE	APPROVED
	X0	INITIAL RELEASE-ALLOCATED BASELINE-ECO 12134	12-10-15	DB

1. APPLICABLE STANDARDS/SPECIFICATIONS:
   - ASME Y14.100M - 2004 ENGINEERING DRAWING PRACTICES
   - ASME Y14.5M - 1994, DIMENSIONS AND TOLERANCING
   - ASME Y14.38 - 2007 ABBREVIATIONS AND ACRONYMS
   - ASTM SI 10 - AMERICAN NATIONAL STANDARD FOR THE USE OF THE INTERNATIONAL SYSTEM OF UNITS (SI): THE MODERN METRIC SYSTEM
2. MATERIAL: COMMERCIAL ALUMINUM STEP PLANK, 5052-H32 (4.75" X 2" X 0.10" THK)
3. REMOVE ALL BURRS AND BREAK SHARP EDGES EQUIVALENT TO R .13 TO 1.
4. ITEM IDENTIFICATION:

   APPLY THE FOLLOWING MARKING IAW MIL-STD-130 METHOD OPTIONAL.

   6W728-6457819-01M1
   MFR XXXXX (MANUFACTURER'S CAGE CODE)

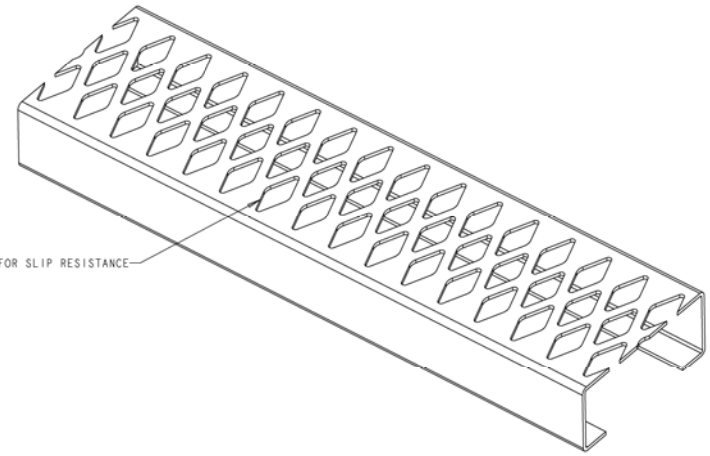

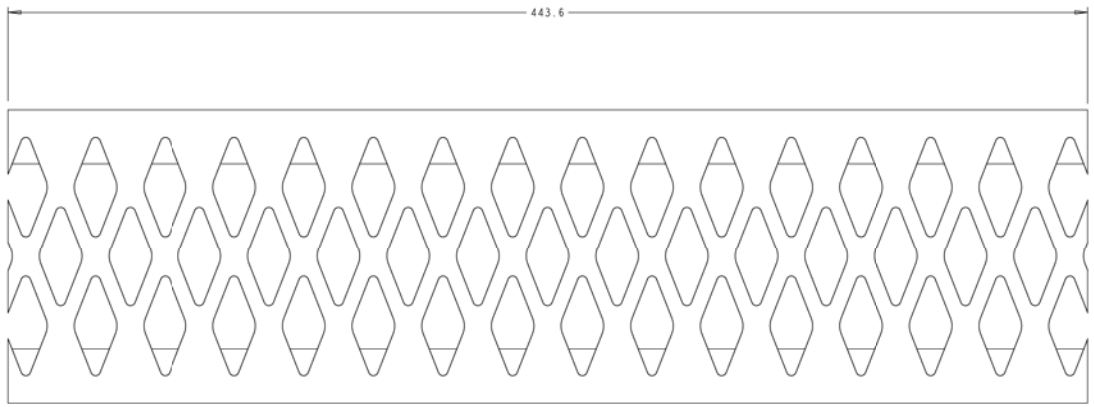

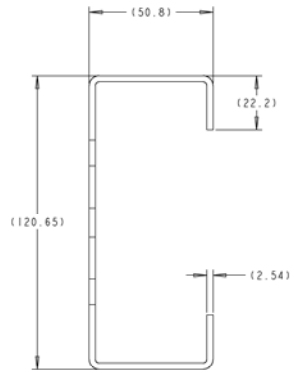

PART NO. 6457819-01M1

UNLESS OTHERWISE INDICATED ALL HARD COPY DRAWINGS ARE UNCONTROLLED

LIMITED RIGHTS STATEMENT:
CONTRACT NO: W56HZV-12-C-0262
CONTRACTOR NAME: BAE SYSTEMS TACTICAL VEHICLE SYSTEMS LP,
CONTRACTOR ADDRESS: 2000 I-10 WEST, SEALY, TEXAS 77474
THE GOVERNMENT'S RIGHTS TO USE, MODIFY, REPRODUCE, RELEASE, PERFORM, DISPLAY, OR DISCLOSE THESE TECHNICAL DATA ARE RESTRICTED BY PARAGRAPH (b)(3) OF THE RIGHTS IN TECHNICAL DATA-NON-COMMERCIAL ITEMS CLAUSE CONTAINED IN THE ABOVE IDENTIFIED CONTRACT. ANY REPRODUCTION OF TECHNICAL DATA OR PORTIONS THEREOF MARKED WITH THIS LEGEND MUST ALSO REPRODUCE THE MARKINGS. ANY PERSON, OTHER THAN THE GOVERNMENT, WHO HAS BEEN PROVIDED ACCESS TO SUCH DATA, MUST PROMPTLY NOTIFY THE ABOVE NAMED CONTRACTOR.

EXPORT CONTROLLED DATA
THE EXPORT OF THIS INFORMATION IS GOVERNED BY THE U.S. INTERNATIONAL TRAFFIC IN ARMS REGULATIONS (ITAR). THIS INFORMATION MAY NOT BE EXPORTED TO A FOREIGN PERSON/ENTITY WITHOUT PROPER AUTHORIZATION BY THE U.S. DEPARTMENT OF STATE

THIRD ANGLE PROJECTION

METRIC
DIMENSIONS ARE IN MILLIMETERS
UNLESS OTHERWISE SPECIFIED
TOLERANCES
ANGULAR +/- 1 MINUTE
X PLACE +/- 1.5
1 PLACE +/- 0.8 2 PLACE +/- 0.25
DO NOT SCALE DRAWING

	APPROVED	DATE
DRAWN		11-09-20
CHECKED		
DESIGNER	D.FERGUSON	11-09-20
ENGINEER	M.LAPPIN	11-09-20

CONTRACT NO.

BAE SYSTEMS
Copyright © 2007 BAE Systems Land and Armaments L.P. Tactical Wheeled Vehicles
Sealy, Tx 77474 / Sterling Heights, MI 48314 / Fairfield, Oh 45011

TITLE: PLANK, STEP JLTV

SIZE A0 | FSCM CODE 6W728 | DWG NO. 6457819 | REV X0

WEIGHT 3/2 | SCALE 1:1 | SHEET 1 OF 1

ADDITIONAL APPROVALS	DATE