DWG NO. 680-CM0012 | SH 1 | REV A

NOTES: UNLESS OTHERWISE SPECIFIED.
1. THIS DRAWING IS GENERATED FROM A 3D CAD MODEL. ANY CHANGES ARE TO BE IMPLEMENTED IN THE ORIGINAL 3D FILE.
2. DO NOT SCALE DRAWING.
3. MATERIAL: MAKE FROM ROBERTSON GRATING: 19SG4, ALUMINUM SWAGE-LOCK GRATING, 1-1/2" X 3/16" BAR, PLAIN/SMOOTH TOP, BANDED ENDS.
4. SURFACE TREATMENT: STOCK
5. DIMENSIONAL LIMITS APPLY AFTER SURFACE TREATMENT, IF APPLICABLE.
6. WELD-IN TAB QTY. AND LOCATION FOR REFERANCE ONLY. FIELD FIT TABS FOR BEST PLACEMENT. MINIMUM QTY. OF 4 TABS.

REVISION HISTORY

REV	DESCRIPTION	DATE	EC	APPROVED
A	INITIAL RELEASE	12/05/2022	91920	AV

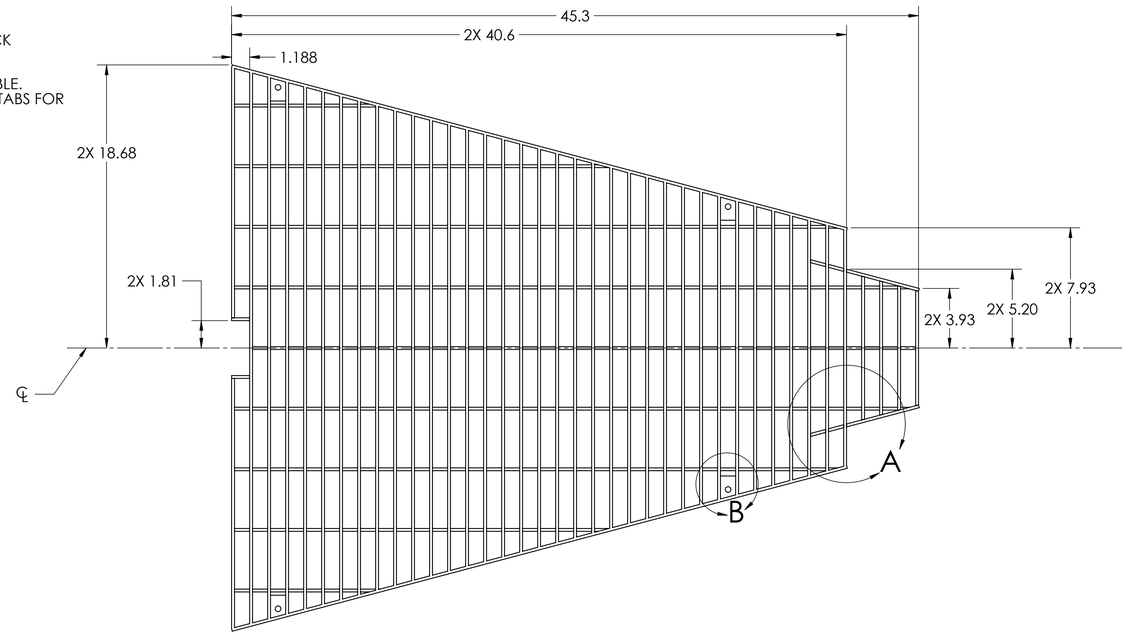

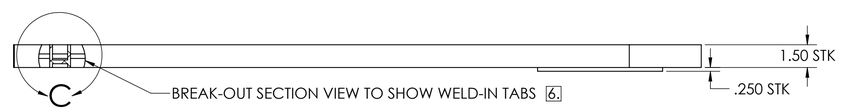

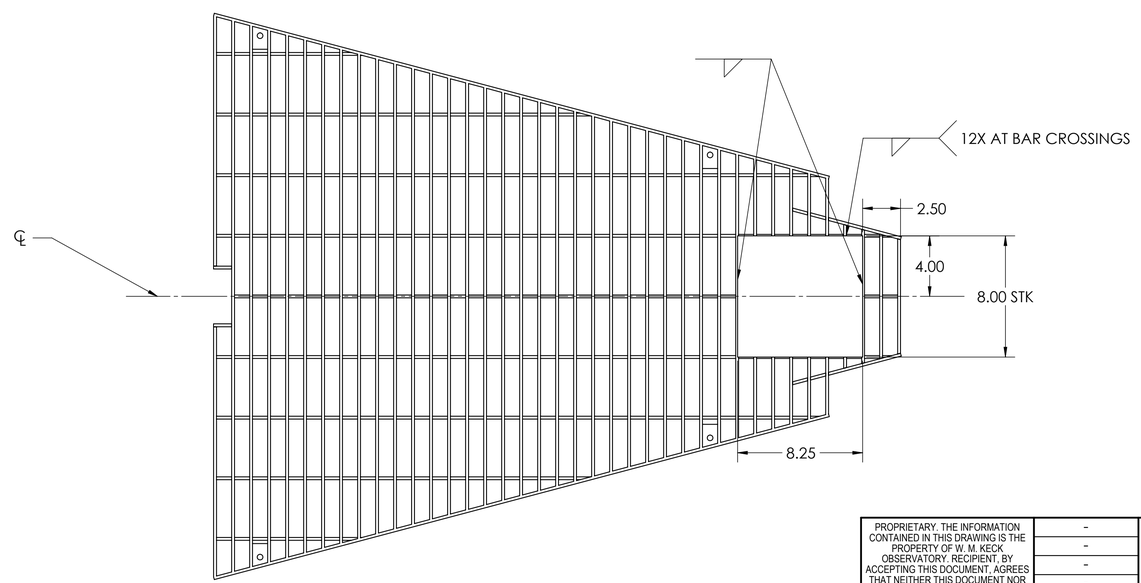

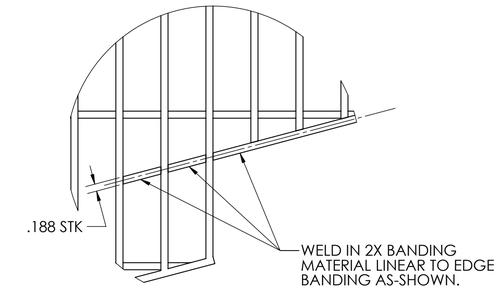

DETAIL A
SCALE 1 : 2
2 PLACES

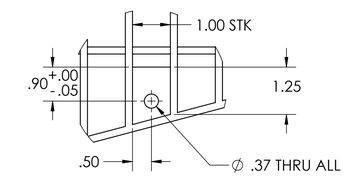

DETAIL B
SCALE 1 : 2
4 PLACES

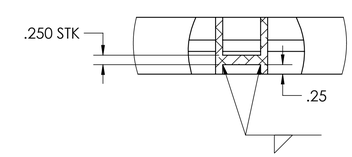

DETAIL C
SCALE 1 : 2

RELEASED

PROPRIETARY. THE INFORMATION CONTAINED IN THIS DRAWING IS THE PROPERTY OF W. M. KECK OBSERVATORY. RECIPIENT, BY ACCEPTING THIS DOCUMENT, AGREES THAT NEITHER THIS DOCUMENT NOR THE INFORMATION DISCLOSED HEREIN NOR ANY PART THEREOF SHALL BE REPRODUCED OR TRANSFERRED TO OTHER DOCUMENTS OR USED OR DISCLOSED TO OTHERS FOR MANUFACTURING OR ANY OTHER PURPOSE EXCEPT AS SPECIFICALLY AUTHORIZED IN WRITING BY THE W. M. KECK OBSERVATORY. ALL RIGHTS RESERVED. COPYRIGHT W. M. KECK OBSERVATORY.

NEXT ASSY: 680-CM0010

UNLESS OTHERWISE SPECIFIED
DIM ARE IN INCHES
TOL ON ANGLE .X ± .5° X. ± 1.0°
1 PL ± .1 2 PL ± .03 3 PL ± .010
INTERPRET DIM AND TOL PER ASME Y14.5-2018
64

THIRD ANGLE PROJECTION

INTERPRET PER ASME Y14.100-2017

BREAK ALL SHARP EDGES.
NO BURRS PERMITTED.
.020" CHAMFER/RADIUS MAX.

		DATE
LAST EDIT BY	A.VANDENBERG	12/5/2022
CREATED BY	A.VANDENBERG	10/27/2022
ENGINEERING APPROVER	J.PAYNE	12/05/2022
RELEASE APPROVER	T.WOLD	12/05/2022

W. M. KECK OBSERVATORY
65-1120 MAMALAHOA HWY
KAMUELA HI 96743
(808) 885-7887

TITLE: GRATE, AZIMUTH CABLE WRAP

SIZE D | DWG NO. 680-CM0012 | REV A

SCALE 1:5 | WEIGHT 31.9 lbs. | SHEET 1 OF 1