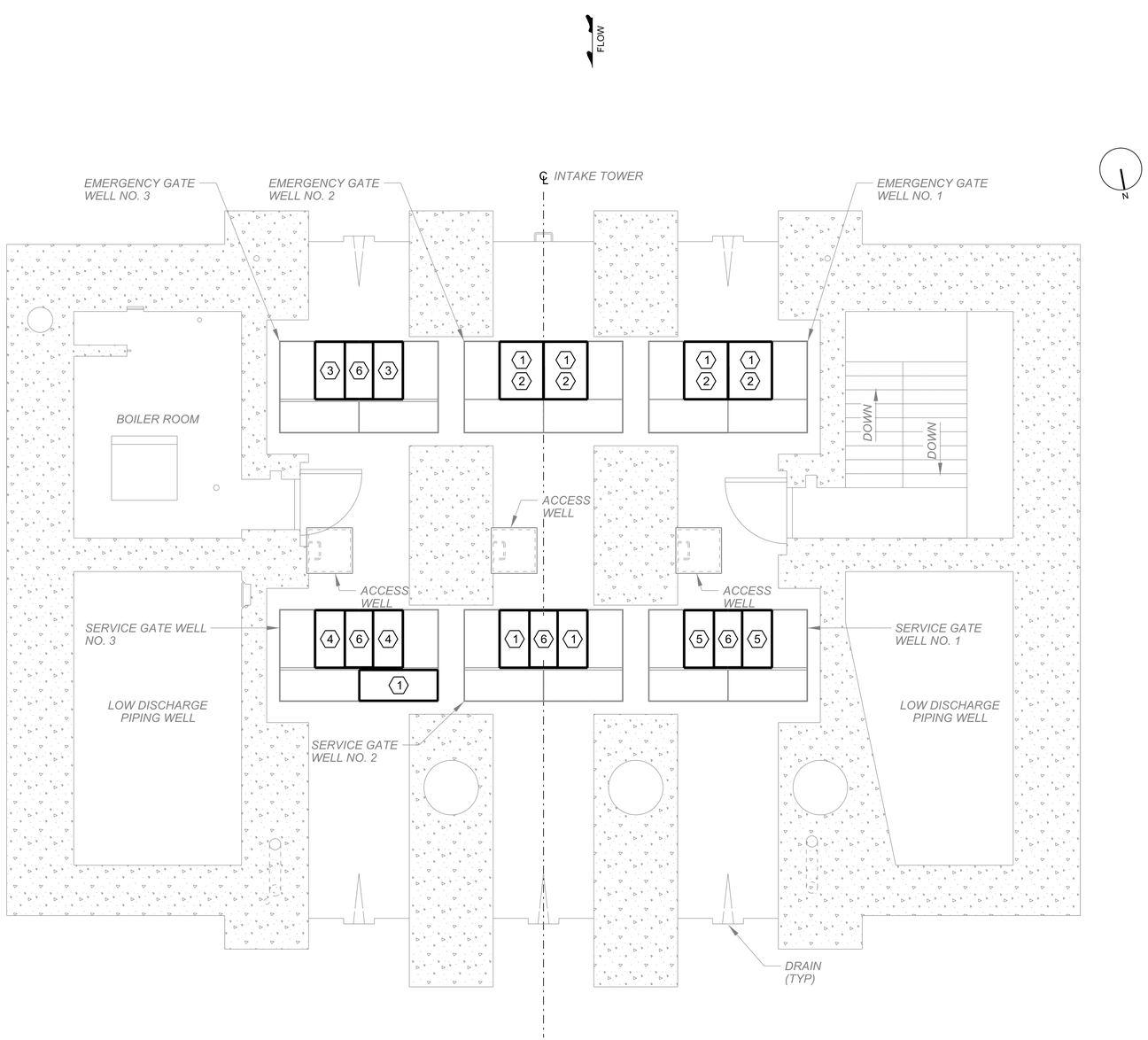

WORK PLATFORM ALUMINUM PLANKING PLAN

1/4"=1'

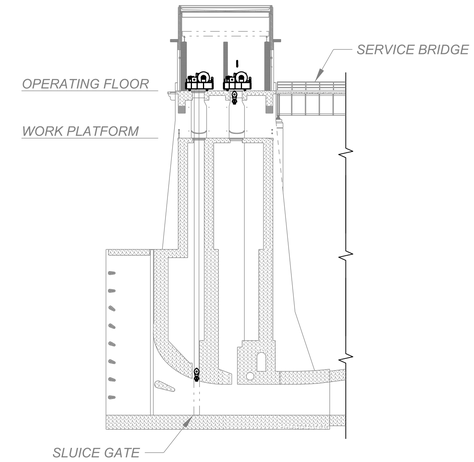

KEY ELEVATION

KEYNOTES:

1. REPLACE PLANKING PANELS AS PART OF BASE CONTRACT.
2. EXISTING PLANKING PANELS (WITH HOIST OPENING) TO BE REPLACED WITH PLANKING PANELS WITHOUT OPENING AS PART OF BASE CONTRACT.
3. REPLACE PLANKING PANELS AS PART OF OPTION NO. 1.
4. REPLACE PLANKING PANELS AS PART OF OPTION NO. 2
5. REPLACE PLANKING PANELS AS PART OF OPTION NO. 3.
6. PROVIDE OPENING IN PLANKING PANELS TO ACCOMMODATE GATE HOIST.

NOTES:

1. REMOVE EXISTING PLANKING PANELS AND INSTALL NEW PLANKING PANELS TYP FOR ALL BOLD PANELS.
2. FOR THE GATE WELL PLANKING PLAN AND DETAILS SEE DRAWING C-602.
3. FOR EXISTING WORK PLATFORM PLANKING PLAN, REFER TO REFERENCE DRAWINGS 038a.4-U1-4/9 AND 038a.4-U1-40/10.

0 2' 4' 8'
SCALE: 1/4"=1'

US Army Corps of Engineers®

MARK	DESCRIPTION	DATE

DESIGNED BY: B. SAKMAR
DRAWN BY: E. LEISURE
CHECKED BY: J. RUSNAK
SUBMITTED BY: N. NICOLAS P. LAZZARO, P.E.
SIZE: ANSI D
FILE: 31-MAY-2019 11:25
ISSUE DATE: 31 MAY 2019
SOLICITATION NO.: W911WN19B8008
CONTRACT NO.:

U.S. ARMY CORPS OF ENGINEERS
PITTSBURGH DISTRICT
1000 LIBERTY AVENUE
PITTSBURGH PA. 15222

ALLEGHENY RIVER BASIN
CROOKED CREEK LAKE
REPLACE GATE OPERATING MACHINERY

GATE OPERATING MACHINERY
WORK PLATFORM ALUMINUM PLANKING PLAN

SHEET ID
C-101

CERTIFIED FINAL DOCUMENTS

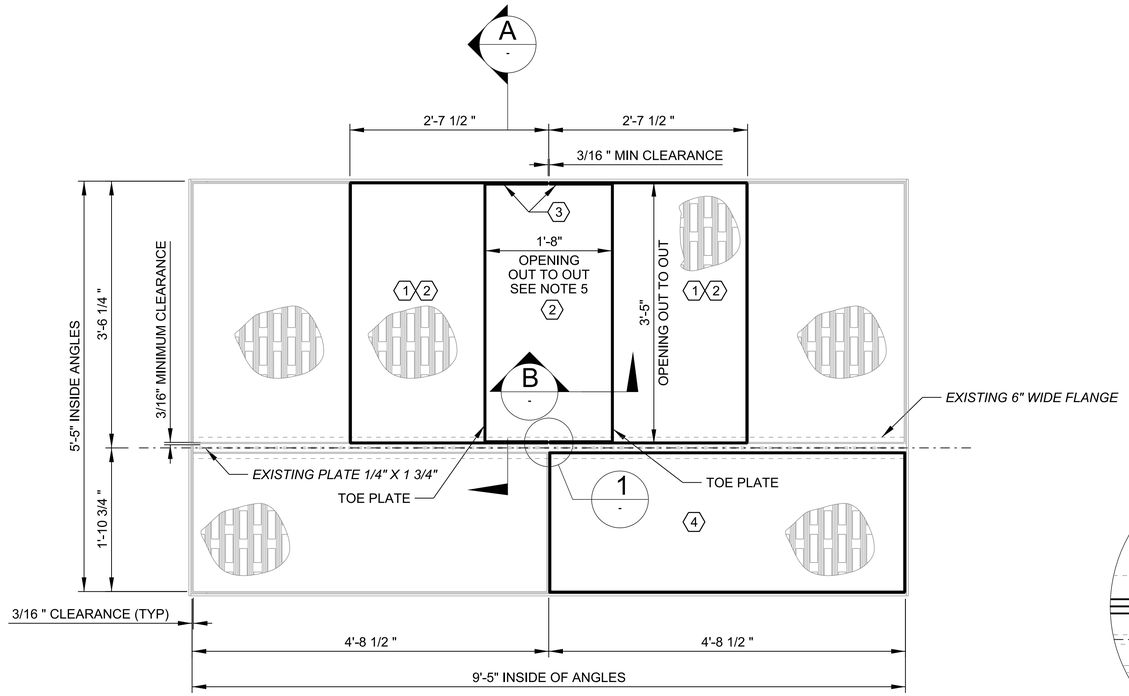

SERVICE AND EMERGENCY GATE WELL PLANKING PLAN

1"=1'

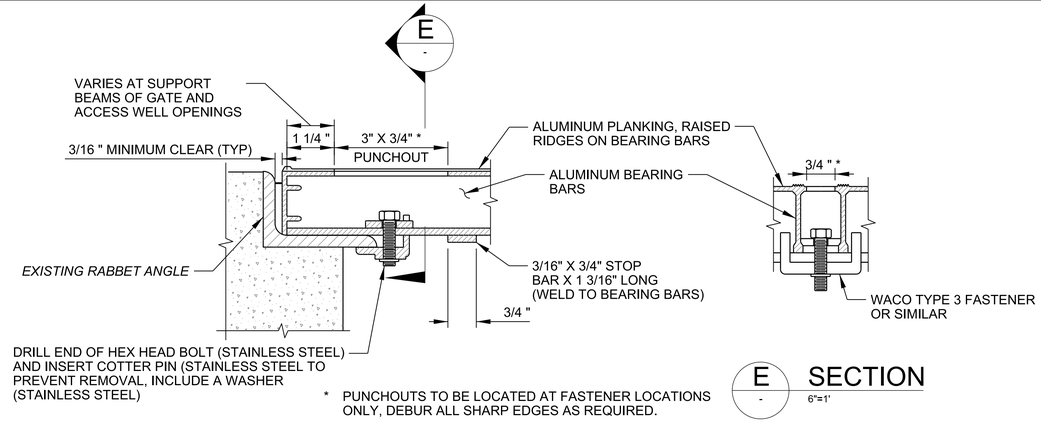

E SECTION 6"=1'

TYPICAL PLANKING FASTENER

6"=1'

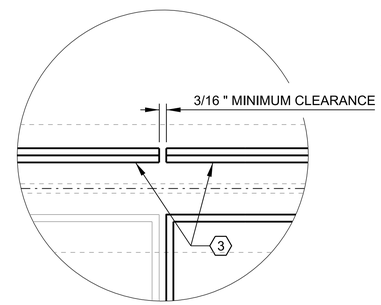

1 DETAIL 6"=1'

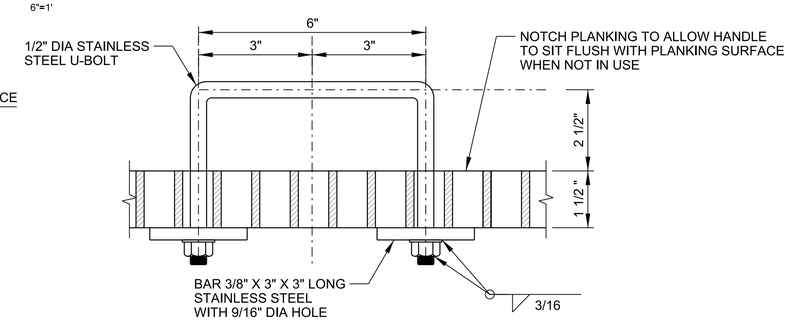

TYPICAL LIFTING HANDLE

6"=1'

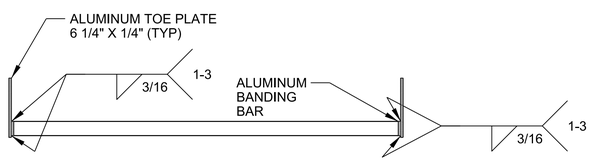

A SECTION 1 1/2"=1'

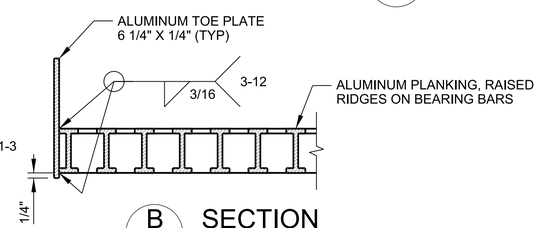

B SECTION 1"=1'

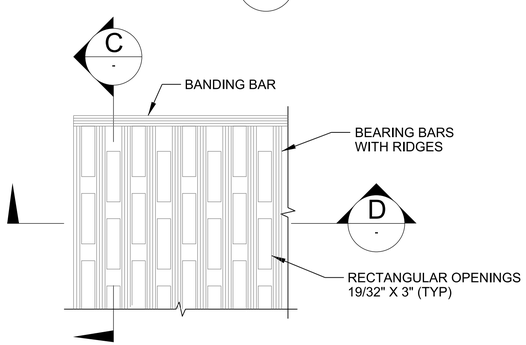

SLOTTED ALUMINUM PLANKING PLAN

3"=1'

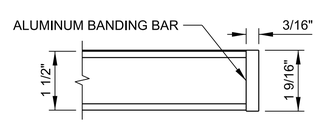

C SECTION 6"=1'

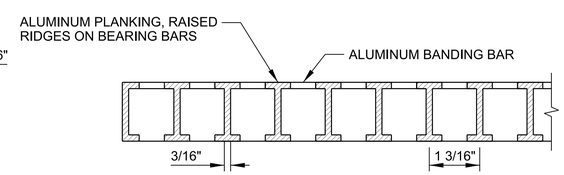

D SECTION 6"=1'

KEYNOTES:

1. PROVIDE ONE SET OF TWO PLANKING PANELS WITH OPENING, AS SHOWN, FOR ALL SERVICE GATE WELLS AND EMERGENCY GATE WELL NO. 3. OPENING IN PLANKING PANELS TO ACCOMMODATE GATE HOIST. DO NOT PROVIDE OPENING FOR PLANKING PANELS IN EMERGENCY GATE WELLS NO. 1 AND 2.
2. PROVIDE TWO SETS OF TWO PLANKING PANELS WITHOUT OPENING (EACH PANEL TO COVER AN AREA SIZED 3'-6 1/4" X 2'-7 1/2") TO REPLACE EXISTING PANELS WITH OPENING IN EMERGENCY GATE WELLS NO. 1 AND 2.
3. TOE PLATE TO BE WELDED TO BANDING BARS AS SHOWN IN SECTION A.
4. PROVIDE ONE PLANKING PANEL TO REPLACE EXISTING CRUSHED PANEL ON SERVICE GATE WELL NO. 3. THE PANEL MUST COVER AN AREA SIZED 1'-10 3/4" X 4'-8 1/2".

PLANKING NOTES:

1. ALL ALUMINUM PLANKING IS TO BE AS FOLLOWS, UNLESS OTHERWISE NOTED:
   - A. MATERIAL - ALUMINUM, ASTM B221-ALLOY 6063-T6 TEMPER FOR BEARING BARS.
   - B. BEARING BARS ARE TO BE 1 1/2" X 3/16" AT 1 1/2" C TO C.
   - C. MAXIMUM WEIGHT OF EACH PANEL SHALL NOT EXCEED 60LBS.
   - D. ALL PANELS ARE TO BE END BANDED ALL AROUND.
   - E. PROVIDE 4 FASTENER CLIPS FOR EACH PANEL.
   - F. PROVIDE 3/16" CLEARANCE BETWEEN EACH PANEL AND EXISTING GATE FRAMING.
   - G. ALL NEW LIFTING HANDLES SHALL BE PLACED IN THE SAME LOCATION AND ORIENTATION AS EXISTING HANDLES.
2. NEW 1 1/2" SLOTTED ALUMINUM TYPE PLANKING IS TO BE INSTALLED AT ALL IDENTIFIED LOCATIONS.
3. PLANKING PANELS SHALL BE INTERCHANGEABLE AMONG SIMILAR OPENINGS.
4. ALL DIMENSIONS SHALL BE FIELD VERIFIED PRIOR TO FABRICATION AND INSTALLATION OF ANY ALUMINUM PLANKING PANELS.
5. ACTUAL OPENING DIMENSIONS IN PLANKING PANELS TO BE DETERMINED FROM FINAL APPROVED HOIST DESIGN.
6. FOR ALL OPTIONS, PROVIDE PLANKING PANELS WITH OPENING.
7. ALL EXISTING AND EMBEDDED STEEL FRAMING MEMBERS ARE TO REMAIN IN PLACE.
8. FOR EXISTING PLANKING DETAILS, REFER TO REFERENCE DRAWING O38a.4-U1-4/10.

SCALE: 6"=1' | SCALE: 3"=1' | SCALE: 1-1/2"=1' | SCALE: 1"=1'

US Army Corps of Engineers®

MARK	DESCRIPTION	DATE

DESIGNED BY: B. SAKMAR
DRAWN BY: E. LEISURE
CHECKED BY: J. RUSNAK
SUBMITTED BY: M. NICOLASI / J. LAZZARO, P.E.
SIZE: ANSI D
ISSUE DATE: 31 MAY 2019
SOLICITATION NO.: W911WN19B8008
CONTRACT NO.:
DATE: 31-MAY-2019 11:25

U.S. ARMY CORPS OF ENGINEERS
PITTSBURGH DISTRICT
1000 LIBERTY AVENUE
PITTSBURGH PA, 15222

ALLEGHENY RIVER BASIN
CROOKED CREEK LAKE
REPLACE GATE OPERATING MACHINERY

GATE OPERATING MACHINERY
ALUMINUM PLANKING DETAILS

SHEET ID
C-602

CERTIFIED FINAL DOCUMENTS