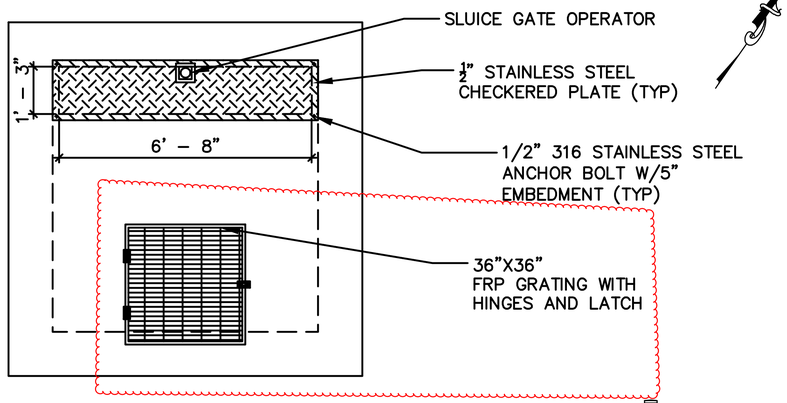

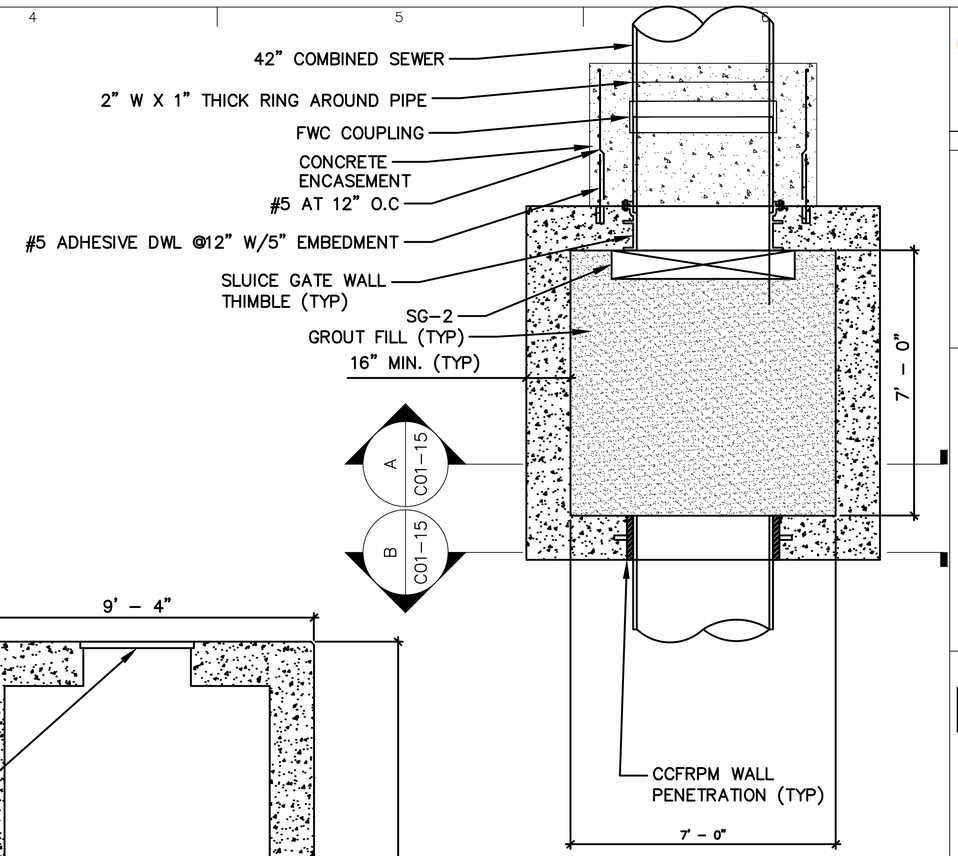

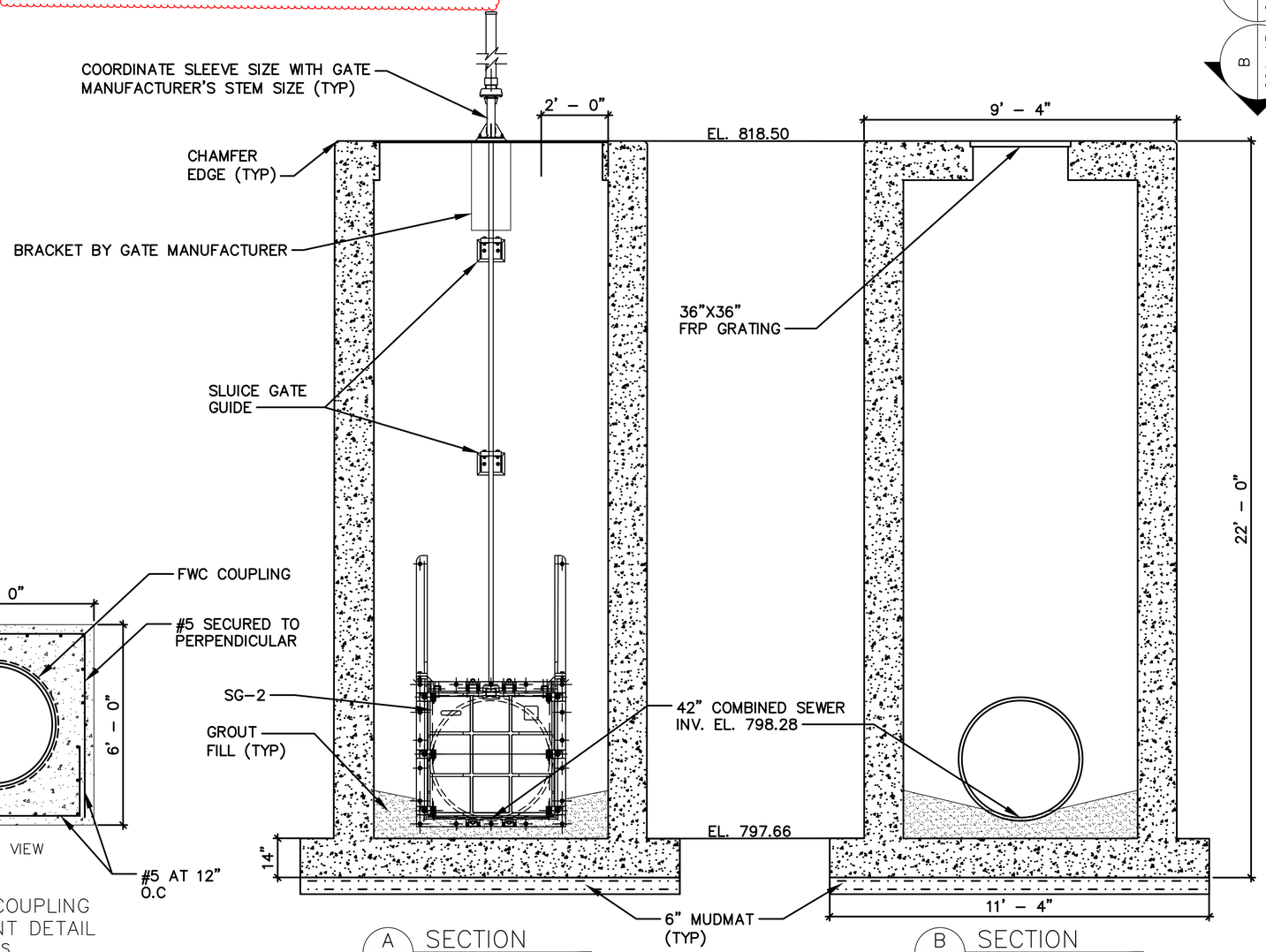

A SECTION C01-15

B SECTION C01-15

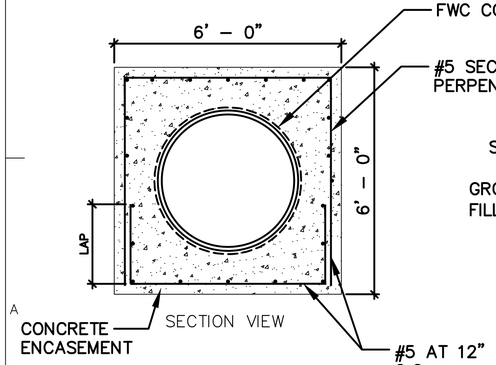

42" FWC COUPLING ENCASEMENT DETAIL
N.T.S

NOTE:

1. CONTRACTOR TO COORDINATE DIMENSIONS OF THE CHECKERED PLATES FOR SLUICE GATE ACCESS WITH THE SLUICE GATE MANUFACTURER TO ACCOUNT FOR GATE STEM AND OPERATOR.
2. MUDMAT SHALL USE CLASS B CONCRETE PER SPECIFICATION SECTION 03 30 00.
3. STRUCTURE SHALL BE PROVIDED WITH EXTENDED BASE AS NECESSARY TO PREVENT FLOTATION WITH A FACTOR OF SAFETY OF 1.2. ASSUME GROUNDWATER LEVEL IS AT FINISHED GRADE AND SOIL BACKFILL SATURATED WEIGHT IS 120 POUNDS PER CUBIC FOOT.
4. PROVIDE RAILING PER DETAIL ON SHEET C00-11 ON THREE FACES OF STRUCTURE WITH DROP IN GRADE GREATER THAN 1-FOOT.
5. PROVIDE FRP GRATING WITH TWO HINGES AND PAD LOCK.
6. BURIED PIPE SHALL PASS TESTING PER SPECIFICATION 33 05 05 PRIOR TO CONCRETE ENCASEMENT BEING INSTALLED.

ARCADIS

LEGAL ENTITY:
ARCADIS U.S., INC.

CONSULTANTS

SEALS

CITY OF NEWARK
DIVISION OF WATER AND WASTEWATER

NEWARK SOUTH 2ND STREET INTERCEPTOR PROJECT

NO.	DATE	ISSUED FOR	BY
1	03/09/24	PR-003	WDL

COPYRIGHT: ARCADIS, INC. 2022

DATE: JANUARY 2024
PROJECT NO.: 30140351
FILE NAME: C-CSO-1013
DESIGNED BY: ASB
DRAWN BY: AJH
CHECKED BY: MAP

SHEET TITLE

CS-100 STRUCTURE DETAILS

ISSUE STATUS: CTC

SCALE: 1"=2'

BAR IS ONE INCH ON UNREDUCED DRAWING

SHEET NO.: C01-15

User: DLUNN Spec: AUS-NCSMOD File:C:\USERS\DLUNN\ONEDRIVE - ARCADIS\PROJECT DOCUMENTS - 30140351 - NEWARK SOUTH 2ND ST INTERCEPTOR DESIGN\03 ENGINEERING\01 CADD\03 SHEETS\C-CSO-1013.DWG Scale:1:1 SavedDate:4/4/2024 Time:10:06 Plot Date: Lunn, David; 4/4/2024; 10:07 ; Layout:C01-15