cut 2.055

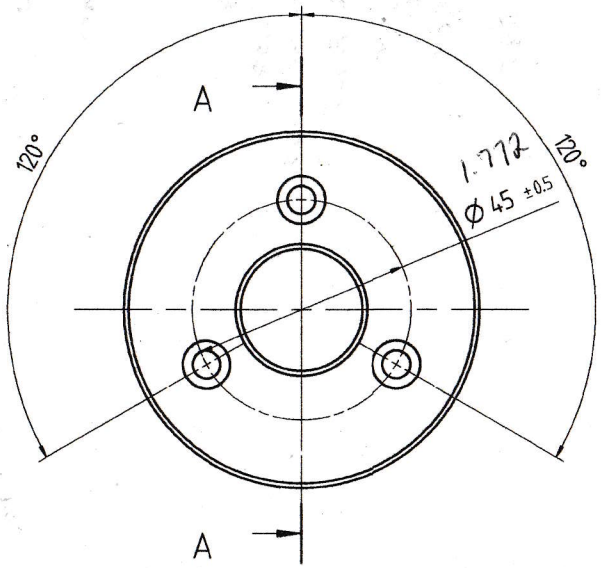

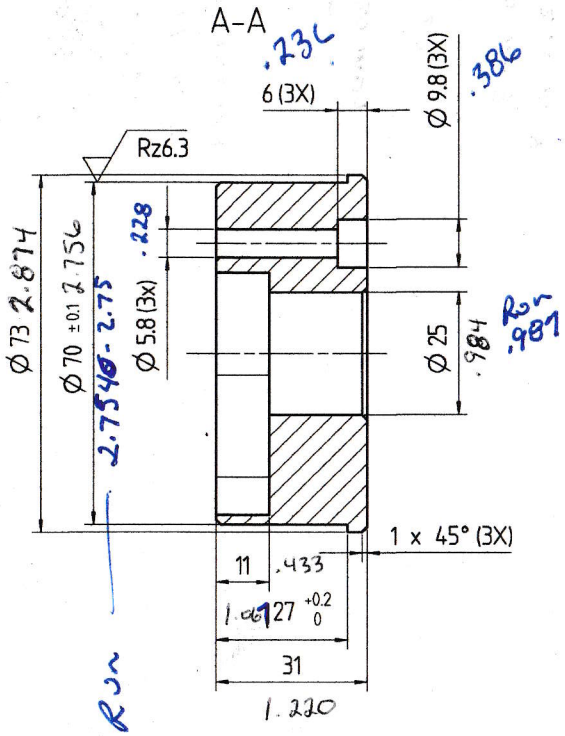

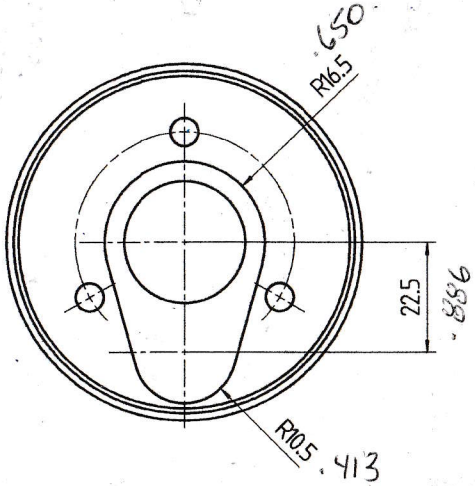

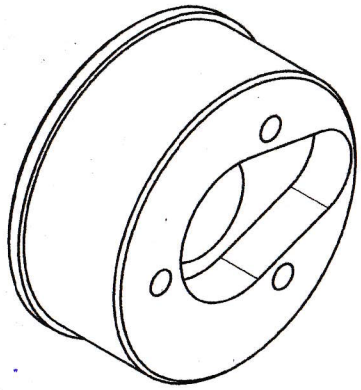

Notes:
1. Dimensions apply after plating
2. Electroless nickel plating to meet MIL-C-26074B and thickness of 0.0127mm to 0.0254mm thickness per side.

.0005 - .001

Condition at time of delivery	
de-scaled (degree of purity SA 2 1/2 acc. ISO 8501-1)	X
without burrs acc. WN 11310	X
Permissible top-end rounding during flame cutting (also positive bead acc. WN 10572)	--
oil-free / free of grease	X
oiled	--
oiling permissible	--
Indicate the required condition at time of delivery with an X.	

First angle projection

General tolerance (GT) in mm
Size range

	> 30	> 120	> 400	> 1000
	≤ 30	≤ 120	≤ 400	≤ 1000
GT fine				
L	0,2	0,5	0,8	2	4
∢	0,1	0,2	0,4	1	2

Lengths (L) and angle (⊥ ∠) = ±GT

Tolerance Symbols ISO 1101

○	roundness	= 1/2ø-Tol.
⏥	straightness/flatness	= AT
◎	concentricity/run out	= AT
⌯	symmetry	= AT
//	parallelism	= AT
⊕	position	= AT

Languages: EN

Index	alteration	Change no	Fit	Toler.
01		T106533		

PPAP-Level 1 / WN 50020
Inspection dim. ⬭ Aux.dim. ( )

	Date	Name
Drawn	13.02.2018	J.Rhinehart
Checked	07.03.2018	M.Presler
Auth'd	19.03.2018	C.Löw
M.check.	22.03.2018	D.Yanzer

Confidential document
Refer to protection notice ISO 16016

Material: AISI 1018 CD C20
Blank no:
Weight: in kg 0.8

Title: hub
coast control

Prod.
Scale 1:1
Sheet: 1 of: 1

Drawing number: 11015047400

Repl.
Orig. 3159201

Released

3159201/D2D/001/01 A3

11015047400V01ENd001